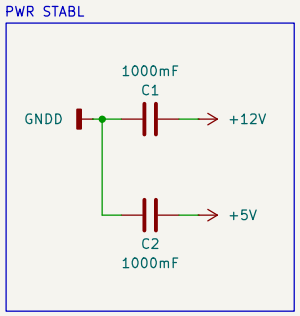

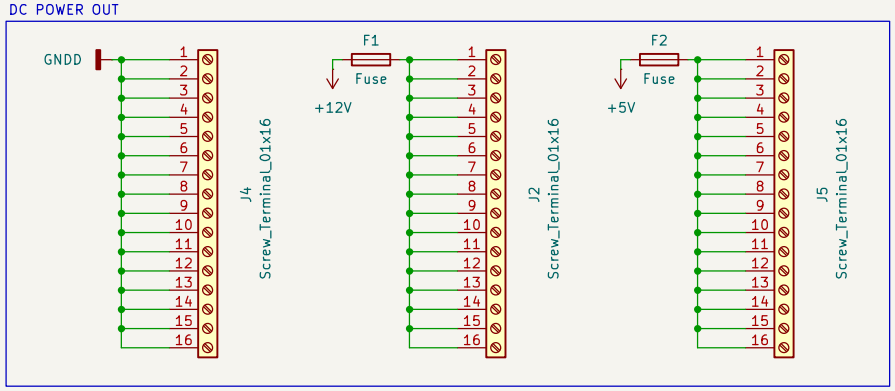

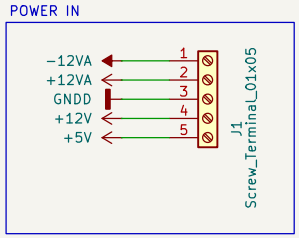

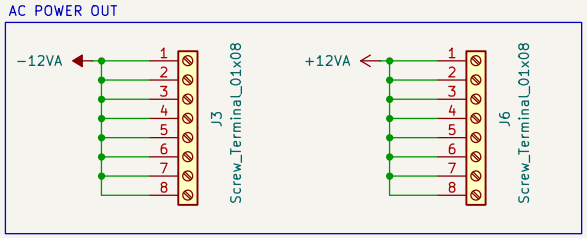

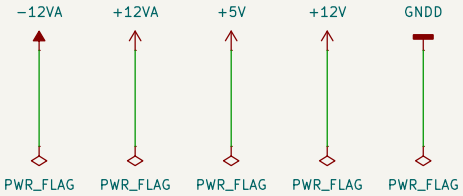

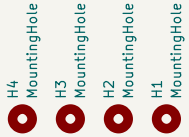

Low Voltage Power Delivery
AC12V and DC5−12V
VA Simulations Oy

Sheet: /
File: PowerDeliveryBoard.kicad_sch

Title: Power Delivery Board

Size: A4	Date: 2025−02−05	**Rev: 1.0**
KiCad E.D.A. 8.0.8		Id: 1/1