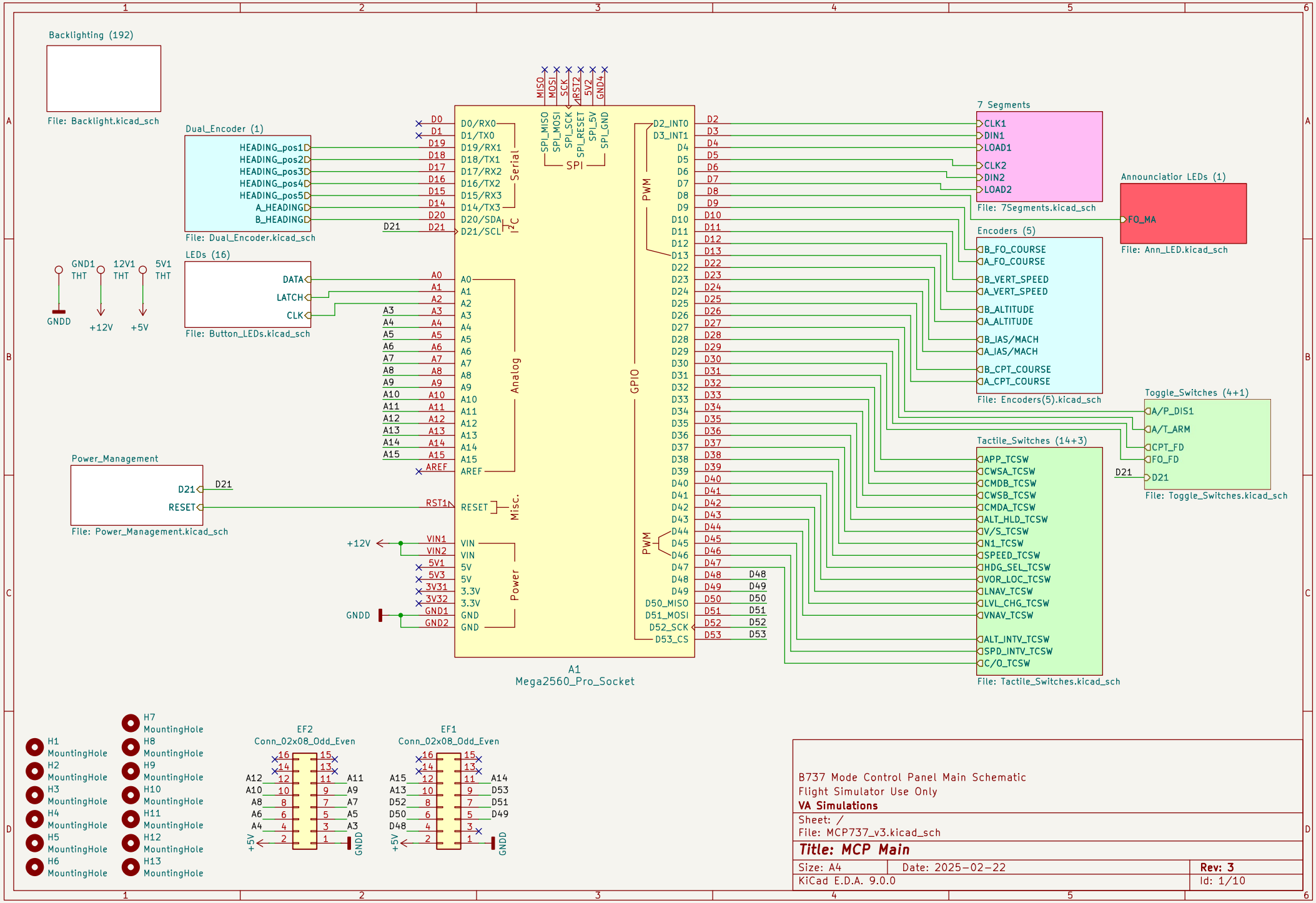
Backlighting (192)
File: Backlight.kicad_sch
Dual_Encoder (1)
HEADING_pos1
HEADING_pos2
HEADING_pos3
HEADING_pos4
HEADING_pos5
A_HEADING
B_HEADING
File: Dual_Encoder.kicad_sch
LEDs (16)
DATA
LATCH
CLK
File: Button_LEDs.kicad_sch
GND1 THT
12V1 THT
5V1 THT
GNDD
+12V
+5V
Power_Management
D21
RESET
File: Power_Management.kicad_sch
MISO
MOSI
SCK
RST2
5V2
GND4
SPI_MISO
SPI_MOSI
SPI_SCK
SPI_RESET
SPI_5V
SPI_GND
SPI
Serial
I2C
Analog
Misc.
Power
PWM
GPIO
A1
Mega2560_Pro_Socket
7 Segments
CLK1
DIN1
LOAD1
CLK2
DIN2
LOAD2
File: 7Segments.kicad_sch
Annunciatior LEDs (1)
FO_MA
File: Ann_LED.kicad_sch
Encoders (5)
B_FO_COURSE
A_FO_COURSE
B_VERT_SPEED
A_VERT_SPEED
B_ALTITUDE
A_ALTITUDE
B_IAS/MACH
A_IAS/MACH
B_CPT_COURSE
A_CPT_COURSE
File: Encoders(5).kicad_sch
Toggle_Switches (4+1)
A/P_DIS1
A/T_ARM
CPT_FD
FO_FD
D21
File: Toggle_Switches.kicad_sch
Tactile_Switches (14+3)
APP_TCSW
CWSA_TCSW
CMDB_TCSW
CWSB_TCSW
CMDA_TCSW
ALT_HLD_TCSW
V/S_TCSW
N1_TCSW
SPEED_TCSW
HDG_SEL_TCSW
VOR_LOC_TCSW
LNAV_TCSW
LVL_CHG_TCSW
VNAV_TCSW
ALT_INTV_TCSW
SPD_INTV_TCSW
C/O_TCSW
File: Tactile_Switches.kicad_sch
H1 MountingHole
H2 MountingHole
H3 MountingHole
H4 MountingHole
H5 MountingHole
H6 MountingHole
H7 MountingHole
H8 MountingHole
H9 MountingHole
H10 MountingHole
H11 MountingHole
H12 MountingHole
H13 MountingHole
EF2
Conn_02x08_Odd_Even
EF1
Conn_02x08_Odd_Even
B737 Mode Control Panel Main Schematic
Flight Simulator Use Only
VA Simulations
Sheet: /
File: MCP737_v3.kicad_sch
Title: MCP Main
Size: A4
Date: 2025-02-22
Rev: 3
KiCad E.D.A. 9.0.0
Id: 1/10

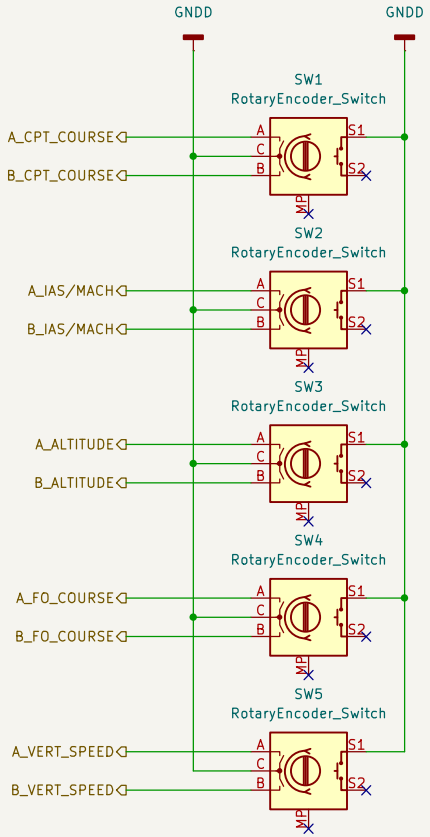

Five Encoders For MCP Module
Excludes HEADING Encoder.
Flight Simulator Use Only
VA Simulations

Sheet: /Encoders (5)/
File: Encoders(5).kicad_sch

Title: MCP Encoders

Size: A4	Date: 2024-11-10	**Rev: 3**
KiCad E.D.A. 9.0.0		Id: 2/10

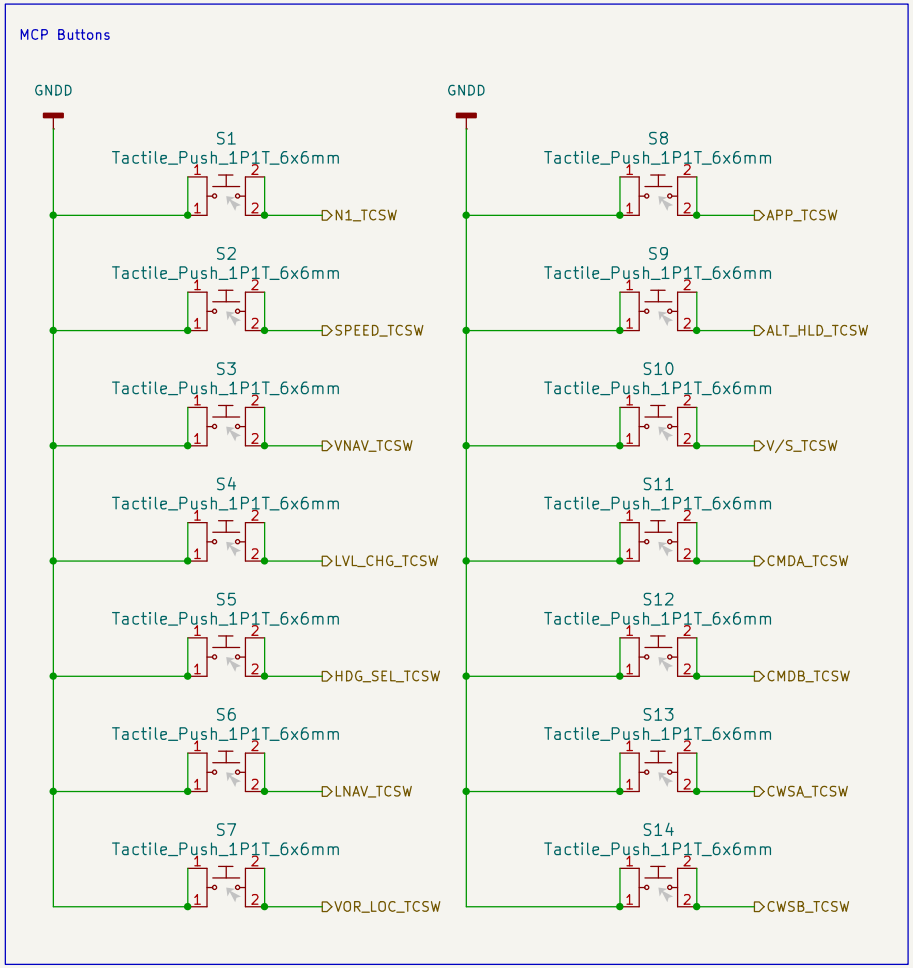

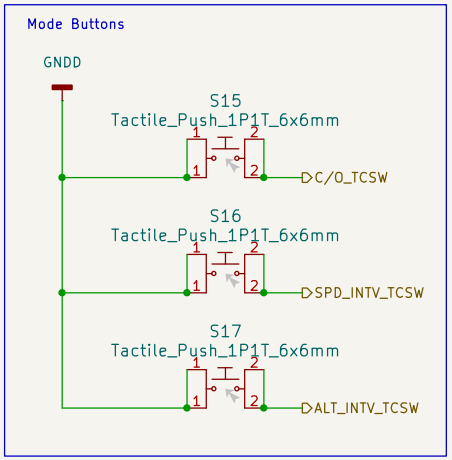

Buttons For MCP Korries And Mode Control
Total 14+3=17
Flight Simulator Use Only
VA Simulations

Sheet: /Tactile_Switches (14+3)/
File: Tactile_Switches.kicad_sch

Title: MCP Tactile Switches

Size: A4	Date: 2024-11-10	**Rev: 3**
KiCad E.D.A. 9.0.0		Id: 3/10

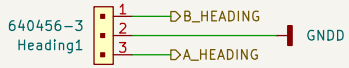

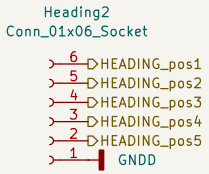

Encoder And 5pos Rotary Switch
Flight Simulator Use Only
VA Simulations

Sheet: /Dual_Encoder (1)/
File: Dual_Encoder.kicad_sch

Title: Dual Encoder

Size: A4	Date: 2024-11-10	**Rev: 3**
KiCad E.D.A. 9.0.0		Id: 4/10

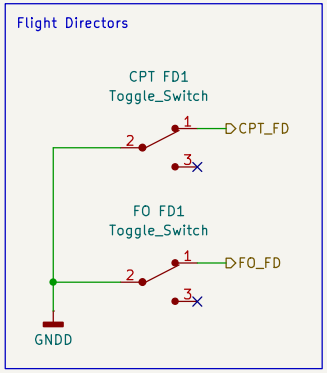

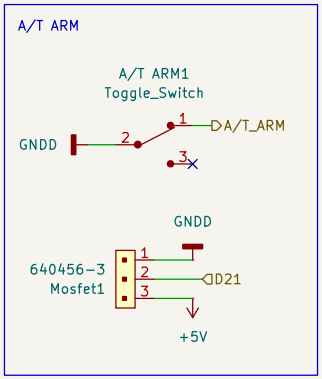

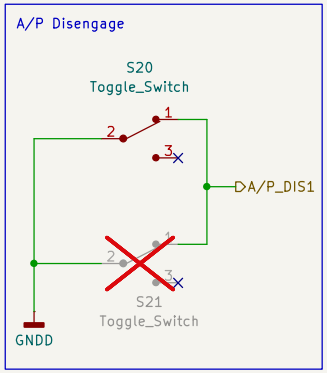

Five 2pos Toggle Switches (Layout Uses 3pin Connectors)
Includes An Electromagnet For AutoReturn.
Flight Simulator Use Only
VA Simulations

Sheet: /Toggle_Switches (4+1)/
File: Toggle_Switches.kicad_sch

Title: Toggle Switches

Size: A4	Date: 2024-11-10	**Rev: 3**
KiCad E.D.A. 9.0.0		Id: 5/10

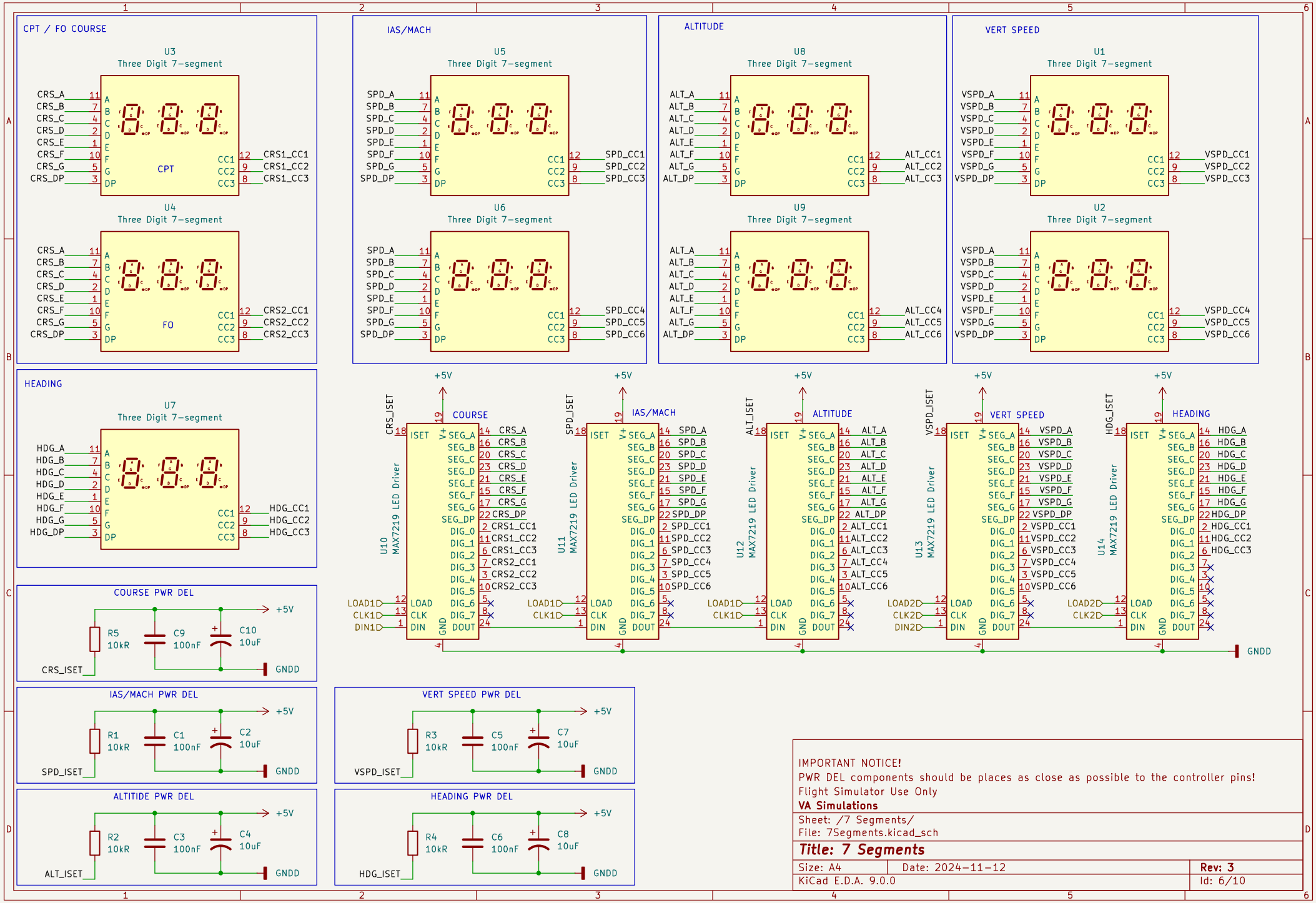
CPT / FO COURSE
U3
Three Digit 7-segment
CRS_A
CRS_B
CRS_C
CRS_D
CRS_E
CRS_F
CRS_G
CRS_DP
CPT
CRS1_CC1
CRS1_CC2
CRS1_CC3
U4
Three Digit 7-segment
FO
CRS2_CC1
CRS2_CC2
CRS2_CC3
IAS/MACH
U5
Three Digit 7-segment
SPD_A
SPD_B
SPD_C
SPD_D
SPD_E
SPD_F
SPD_G
SPD_DP
SPD_CC1
SPD_CC2
SPD_CC3
U6
Three Digit 7-segment
SPD_CC4
SPD_CC5
SPD_CC6
ALTITUDE
U8
Three Digit 7-segment
ALT_A
ALT_B
ALT_C
ALT_D
ALT_E
ALT_F
ALT_G
ALT_DP
ALT_CC1
ALT_CC2
ALT_CC3
U9
Three Digit 7-segment
ALT_CC4
ALT_CC5
ALT_CC6
VERT SPEED
U1
Three Digit 7-segment
VSPD_A
VSPD_B
VSPD_C
VSPD_D
VSPD_E
VSPD_F
VSPD_G
VSPD_DP
VSPD_CC1
VSPD_CC2
VSPD_CC3
U2
Three Digit 7-segment
VSPD_CC4
VSPD_CC5
VSPD_CC6
HEADING
U7
Three Digit 7-segment
HDG_A
HDG_B
HDG_C
HDG_D
HDG_E
HDG_F
HDG_G
HDG_DP
HDG_CC1
HDG_CC2
HDG_CC3
+5V
CRS_ISET
U10
MAX7219 LED Driver
COURSE
SEG_A
SEG_B
SEG_C
SEG_D
SEG_E
SEG_F
SEG_G
SEG_DP
DIG_0
DIG_1
DIG_2
DIG_3
DIG_4
DIG_5
DIG_6
DIG_7
LOAD1
CLK1
DIN1
LOAD
CLK
DIN
GND
DOUT
SPD_ISET
U11
MAX7219 LED Driver
IAS/MACH
ALT_ISET
U12
MAX7219 LED Driver
ALTITUDE
VSPD_ISET
U13
MAX7219 LED Driver
VERT SPEED
LOAD2
CLK2
DIN2
HDG_ISET
U14
MAX7219 LED Driver
HEADING
GNDD
COURSE PWR DEL
R5
10kR
C9
100nF
C10
10uF
CRS_ISET
IAS/MACH PWR DEL
R1
C1
C2
SPD_ISET
VERT SPEED PWR DEL
R3
C5
C7
VSPD_ISET
ALTITIDE PWR DEL
R2
C3
C4
ALT_ISET
HEADING PWR DEL
R4
C6
C8
HDG_ISET
IMPORTANT NOTICE!
PWR DEL components should be places as close as possible to the controller pins!
Flight Simulator Use Only
VA Simulations
Sheet: /7 Segments/
File: 7Segments.kicad_sch
Title: 7 Segments
Size: A4
Date: 2024-11-12
Rev: 3
KiCad E.D.A. 9.0.0
Id: 6/10

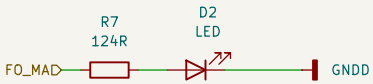

LED For Announciator Light
USES PWM OUTPUTS FROM CONTROLLER!
Flight Simulator Use Only
VA Simulations

Sheet: /Announciatior LEDs (1)/
File: Ann_LED.kicad_sch

Title: Announciator LEDs

Size: A4	Date: 2024-11-23	**Rev: 3**
KiCad E.D.A. 9.0.0		Id: 7/10

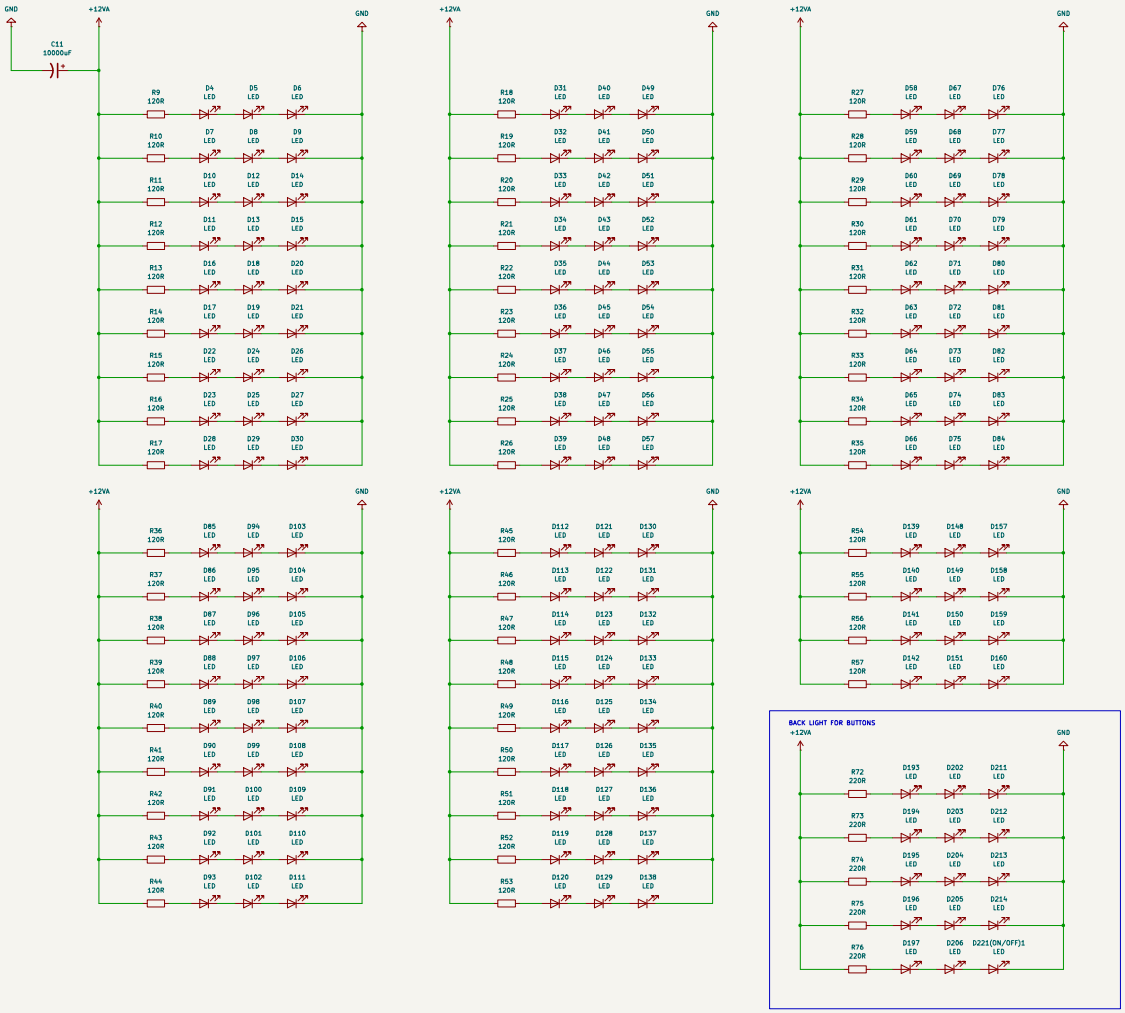

12V Backlight System
Works Independantly From Arduino
Flight Simulator Use Only
VA Simulations

Sheet: /Backlighting (192)/
File: Backlight.kicad_sch

Title: Backlighting

Size: User	Date: 2024-11-23	Rev: 3
KiCad E.D.A. 9.0.0		Id: 8/10

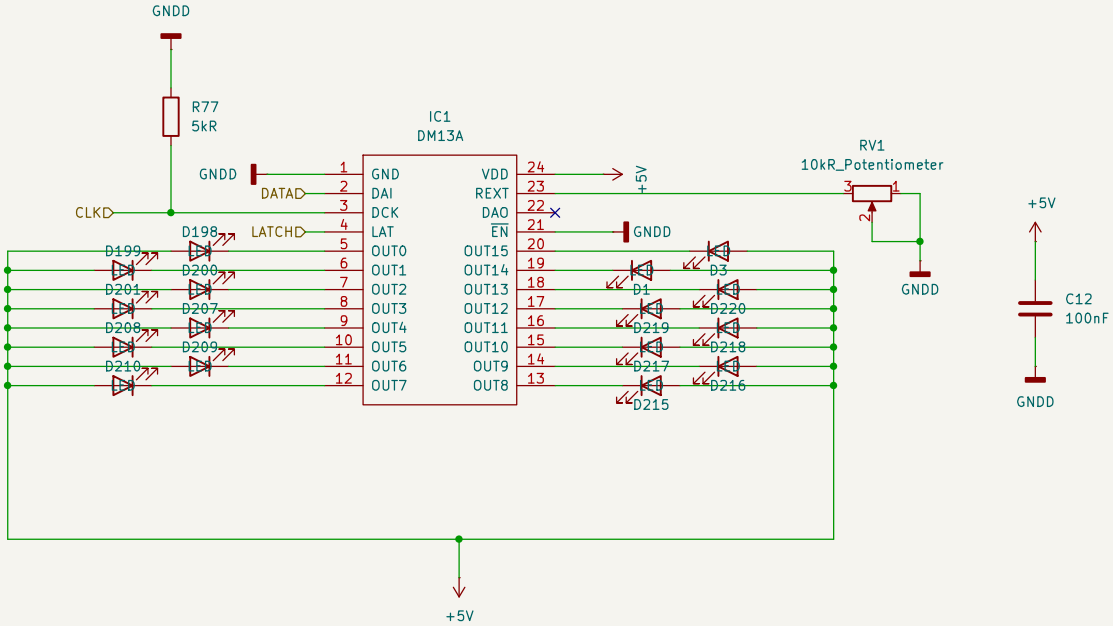

Flight Simulator Use Only

VA Simulations

Sheet: /LEDs (16)/

File: Button_LEDs.kicad_sch

Title:

Size: A4	Date:	**Rev: 3**
KiCad E.D.A. 9.0.0		Id: 9/10

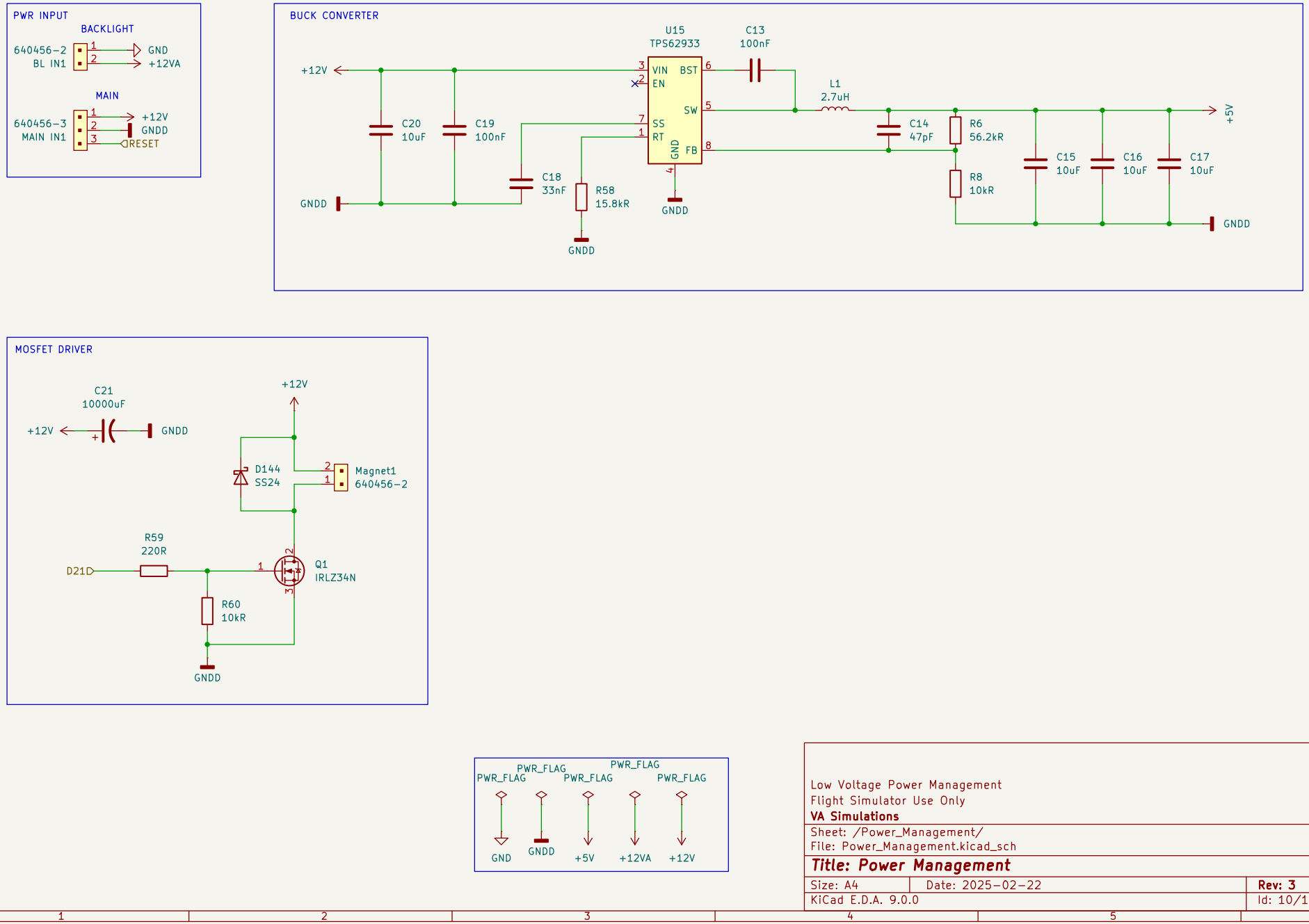
PWR INPUT
BACKLIGHT
640456-2
BL IN1
GND
+12VA
MAIN
640456-3
MAIN IN1
+12V
GNDD
RESET
BUCK CONVERTER
U15
TPS62933
C13
100nF
+12V
C20
10uF
C19
100nF
C18
33nF
R58
15.8kR
GNDD
VIN
EN
SS
RT
BST
SW
GND
FB
L1
2.7uH
C14
47pF
R6
56.2kR
R8
10kR
C15
10uF
C16
10uF
C17
10uF
+5V
MOSFET DRIVER
C21
10000uF
D144
SS24
Magnet1
640456-2
R59
220R
D21
Q1
IRLZ34N
R60
10kR
PWR_FLAG
GND
GNDD
+5V
+12VA
+12V
Low Voltage Power Management
Flight Simulator Use Only
VA Simulations
Sheet: /Power_Management/
File: Power_Management.kicad_sch
Title: Power Management
Size: A4
Date: 2025-02-22
Rev: 3
KiCad E.D.A. 9.0.0
Id: 10/10