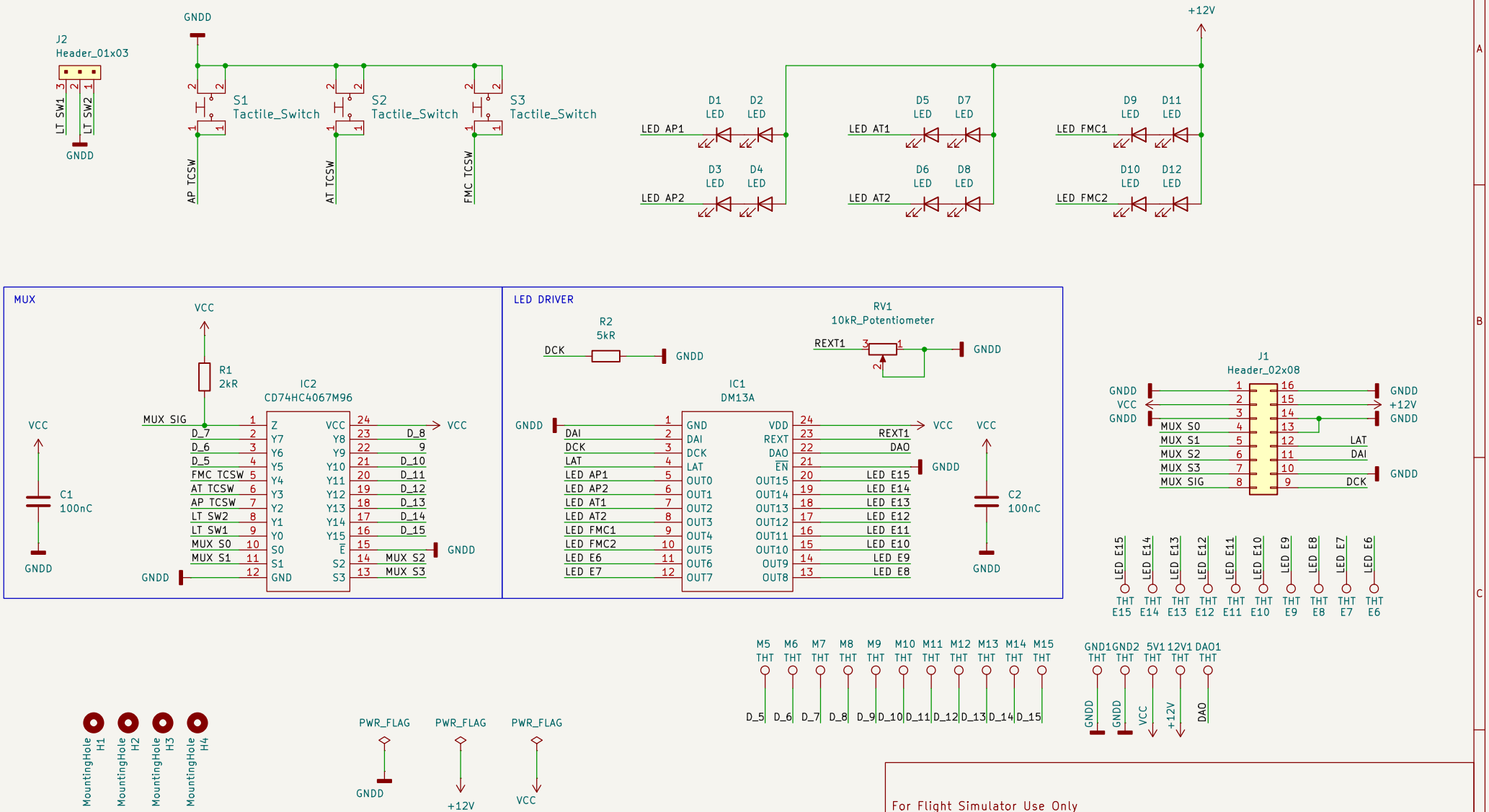
J2
Header_01x03
LT SW1
LT SW2
GNDD
S1
Tactile_Switch
S2
Tactile_Switch
S3
Tactile_Switch
AP TCSW
AT TCSW
FMC TCSW
+12V
D1 LED
D2 LED
D3 LED
D4 LED
D5 LED
D7 LED
D6 LED
D8 LED
D9 LED
D11 LED
D10 LED
D12 LED
LED AP1
LED AP2
LED AT1
LED AT2
LED FMC1
LED FMC2
MUX
VCC
R1
2kR
IC2
CD74HC4067M96
MUX SIG
D_7
D_6
D_5
FMC TCSW
AT TCSW
AP TCSW
LT SW2
LT SW1
MUX S0
MUX S1
C1
100nC
D_8
9
D_10
D_11
D_12
D_13
D_14
D_15
MUX S2
MUX S3
LED DRIVER
R2
5kR
DCK
RV1
10kR_Potentiometer
REXT1
IC1
DM13A
DAI
DCK
LAT
LED AP1
LED AP2
LED AT1
LED AT2
LED FMC1
LED FMC2
LED E6
LED E7
LED E8
LED E9
LED E10
LED E11
LED E12
LED E13
LED E14
LED E15
REXT
DAO
C2
100nC
J1
Header_02x08
MUX S0
MUX S1
MUX S2
MUX S3
MUX SIG
LAT
DAI
DCK
THT E15
THT E14
THT E13
THT E12
THT E11
THT E10
THT E9
THT E8
THT E7
THT E6
M5 THT
M6 THT
M7 THT
M8 THT
M9 THT
M10 THT
M11 THT
M12 THT
M13 THT
M14 THT
M15 THT
D_5
D_6
D_7
D_8
D_9
D_10
D_11
D_12
D_13
D_14
D_15
GND1 THT
GND2 THT
5V1 THT
12V1 THT
DAO1 THT
MountingHole H1
MountingHole H2
MountingHole H3
MountingHole H4
PWR_FLAG
PWR_FLAG
PWR_FLAG
For Flight Simulator Use Only
vasims.fi
VA Simulations Oy
Sheet: /
File: AFDS737.kicad_sch
Title: B737 AFDS Panel
Size: A4
Date: 2025-02-02
Rev: 2.0
KiCad E.D.A. 8.0.8
Id: 1/1